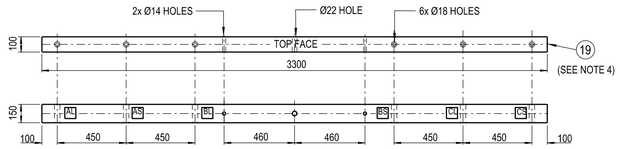

DETAIL 4
CROSSARM ITEM 19
TIMBER CROSSARM 3300 x 150 x 100mm
SCALE 1:20

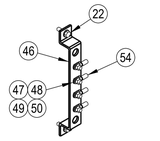

ITEM 46
TOP EARTH BAR

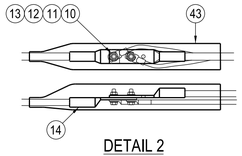

DETAIL 2
SCALE 1:5

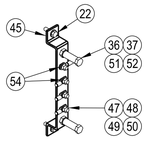

ITEM 45
BOTTOM EARTH BAR

DETAIL 1
NOT TO SCALE

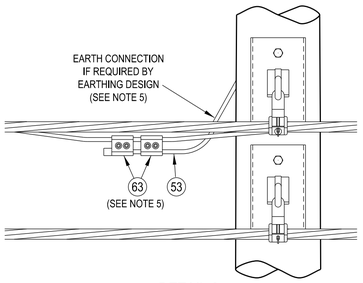

DETAIL 3
LV ABC NEUTRAL CONNECTION
(SEE NOTE 5)
SCALE 1:10

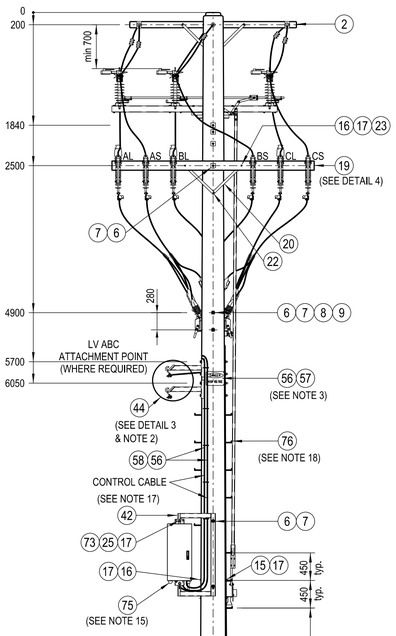

REAR VIEW
SCALE 1:50

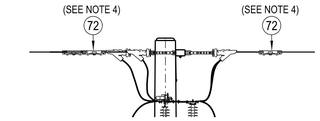

ARRANGEMENT 2
WITH CCT OVERHEAD CONDUCTORS

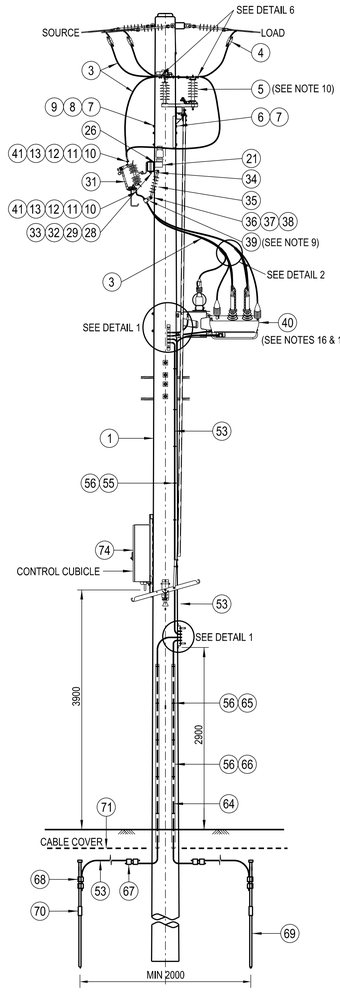

SIDE VIEW
SCALE 1:50

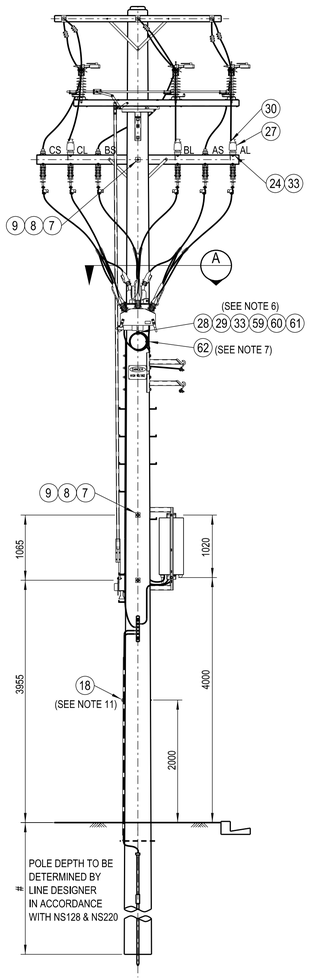

FRONT VIEW
SCALE 1:50

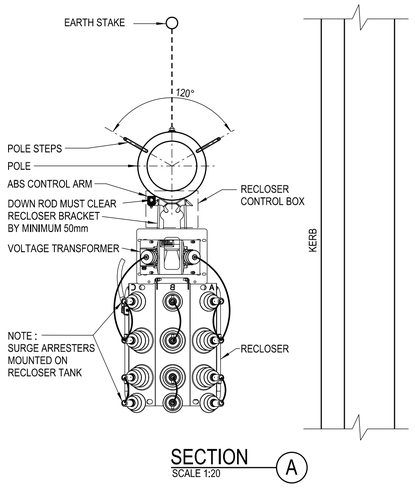

SECTION A
SCALE 1:20

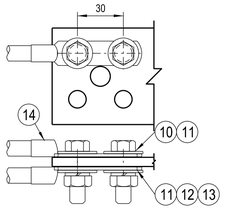

DETAIL 6
TWO BOLT TERMINATION
SCALE 1:2

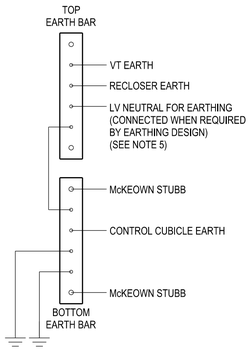

EARTHING SCHEMATIC

NOTES:

1. THE MINIMUM 11kV PHASE TO EARTH CLEARANCE IS 200mm. THE MINIMUM 11kV PHASE TO PHASE CLEARANCE IS 280mm.
2. WHERE BARE LV MAINS EXIST, THEY SHALL BE CONVERTED TO ABC FOR AT LEAST ONE SPAN EITHER SIDE OF THE RECLOSER. IF LV MAINS ARE PRESENT ON THE POLE, A 1-80 LV ABC INTERMEDIATE CONSTRUCTION MUST BE USED.
3. DANGER SIGNS (ITEM 57) ARE TO BE INSTALLED ON BOTH FRONT AND REAR OF THE POLE. SIGNS MUST BE BENT AROUND POLE BEFORE SECURING.
4. WHERE 11kV CCT MAINS EXIST, STANDARD EARTHING POINTS AND COVERS ARE TO BE INSTALLED AS DETAILED IN NS126.
5. IF THE SITE SPECIFIC EARTHING DESIGN REQUIRES THE LV MAINS NEUTRAL TO BE CONNECTED TO THE RECLOSER EARTHING SYSTEM AND IF LV MAINS EXIST IN CLOSE PROXIMITY TO THE POLE, DETAIL 3 SHOULD BE USED FOR THE CONNECTION. IF TWO LV MAINS CABLES ARE ON THE POLE, ONLY ONE LV MAINS CABLE IS TO BE CONNECTED TO THE TOP EARTH BAR.
6. AFTER INSTALLATION OF THE RECLOSER AND CONTROL CUBICLE, THE OSM CONTROL CABLE AND VT OUTPUT CABLE THAT ARE SUPPLIED WITH THE RECLOSER ARE TO BE CONNECTED TO THE CONTROL CUBICLE VIA THE GLANDS AT THE BOTTOM OF THE CONTROL CUBICLE. ENSURE CABLE ROUTE DOES NOT HINDER PLACEMENT OF A LADDER ON THE POLE TO ACCESS CUBICLE. TYPICALLY CABLES TO ENTER BEHIND CUBICLE MOUNTING BRACKET. EXCESS CABLE IS TO BE COILED ON A CABLE STORAGE BRACKET BELOW THE RECLOSER. REFER TO THE MANUFACTURERS TECHNICAL DOCUMENTATION FOR FURTHER INFORMATION.
7. THE EXCESS CONTROL CABLING MUST BE SUITABLY SECURED TO THE CABLE STORAGE BRACKET WITH STAINLESS STEEL CABLE TIES. THE BOTTOM OF THE COIL MUST BE SECURED TO AVOID SWINGING IN THE WIND.
8. THE RECLOSER CONTROL CABLING MUST BE ATTACHED TO THE POLE A MINIMUM OF 200mm FROM ANY EARTHING DOWNLEAD CABLE.
9. THE SUSPENSION CLAMP (ITEM 39) MUST PROVIDE A FIRM CONNECTION TO THE HV DROPPER CABLE. IF REQUIRED, CONDUIT INSERTS MAY BE USED TO ACHIEVE AN EFFECTIVE CONNECTION.
10. THE AIR BREAK SWITCH OPERATING MECHANISM MUST BE INSTALLED ON THE FOOTPATH SIDE OF THE POLE. INSTALLATION ON THE ROAD SIDE OF THE POLE IS NOT ACCEPTABLE.
11. EYE COACH SCREW TO BE INSTALLED 2m ABOVE GROUND LEVEL ON FOOTPATH SIDE OF POLE FOR ATTACHMENT OF OPERATORS "DANGER DO NOT OPERATE" TAG.
12. A SITE SPECIFIC EARTHING DESIGN IS REQUIRED FOR EACH RECLOSER INSTALLATION.
13. THE EARTHING SHOWN ON THIS DRAWING IS INDICATIVE ONLY. ADDITIONAL EARTHING MAY BE REQUIRED TO MEET THE EARTHING DESIGN REQUIRMENTS.
14. ENSURE BURIED EARTH CONDUCTORS ARE CENTRED UNDER CABLE PROTECTION COVER.
15. AN EXTERNAL ANTENNA CAN BE INSTALLED WHERE REQUIRED. THE ACTUAL LOCATION OF THE ANTENNA IS TO BE DETERMINED DURING INSTALLATION OF COMMUNICATION EQUIPMENT. THE LOCATION IS ALWAYS TO COMPLY WITH THE MINIMUM SAFE WORKING DISTANCES SPECIFIED IN AUSGRID's ELECTRICAL SAFETY RULES.
16. THE NOJA RECLOSER TERMINALS ARE LABELLED A, B, C ON THE SOURCE SIDE OF THE RECLOSER AND R, S, T ON THE LOAD SIDE OF THE RECLOSER.
17. THE NOJA CONTROL CUBICLE CAN BE MOUNTED IN ANY ORIENTATION ON THE POLE THAT SUITS THE INSTALLATION LOCATION. THE DESIGNER MUST CONSIDER OPERATOR SAFETY, CONTROL CUBICLE SECURITY AND ABS OPERATING HANDLE CLASHING BEFOER SPECIFYING THE CONTROL CUBICLE ORIENTATION. THE REGIONAL FIELD OPERATING GROUP SHOULD BE CONSULTED WHEN CONSIDERING OPTIONS FOR THE RECLOSER LOCATION AND CONTROL CUBICLE ORIENTATION.
18. POLE STEPS SHOULD ONLY BE INSTALLED ON POLES WHERE ACCESS FOR NORMAL MAINTENANCE VEHICLES CANNOT BE MAINTAINED FOR THE LIFE OF THE POLE. IF POLE STEPS ARE INSTALLED, THEY ARE TO COMPLY WITH THE REQUIREMENTS OF NETWORK STANDARD NS128.
19. REFER TO DESIGNER SAFETY REPORT D22/109578 FOR ATYPICAL HAZARDS ASSOCIATED WITH THIS STANDARD CONSTRUCTION.

ITEM	DESCRIPTION	DRG. No	STOCK CODE	ARR-1 QTY	ARR-2 QTY
76	STEP - POLE, SCREW-IN (SEE NOTE 18)	250144	185198	A/R	A/R
75	ANTENNA - LTE MIMO, GPS COMBO (SEE NOTE 15)		185409	1	1
74	MODEM - SIERRA, WIRELESS, RV50X		185100	1	1
73	WASHER - SPRING, M12, GALVANISED	518082	H12047	2	2
72	COVER - CCT, EARTHING POINT (SEE NOTE 4)		144741		6
71	COVER - CABLE, PROTECTOR, 150mm WIDE (SEE NOTE 14)		151084	A/R	A/R
70	COUPLER - EARTH ELECTRODE (TO SUIT Ø15mm ROD)		H31649	A/R	A/R
69	ELECTRODE - DRIVEN EARTH, Ø15x1800mm		H31631	A/R	A/R
68	CONNECTOR - COMPRESSION, PROFILE E, COPPER (70mm² CONDUCTOR TO Ø15mm ROD)		H31699	4	4
67	CONNECTOR - COMPRESSION, PROFILE C, COPPER (70mm² TO 70mm² CONDUCTOR)		177942	4	4
66	GUARD - EARTH, COVER, 3m, BLACK, PVC		157552	2	2
65	SADDLE - CABLE, 15mm, DOUBLE SIDED, GALVANISED			10	10
64	ROD - GROUND, ANTI-THEFT ARRANGEMENT (ERICO DRG: XE2073) (SUPPLIER PART No.: 615800CW0505)		182632	2	2
63	CONNECTOR - INSULATION PIERCING, 95-150 LV ABC/95-150 LV ABC (SEE NOTE 5)		176591	2	2
62	STRAP - TIEDOWN, CABLE, 520x4.6mm, STAINLESS STEEL (SEE NOTE 7)		182644	A/R	A/R
61	SCREW - COACH, M16x100mm GALVANISED		H40662	1	1
60	BOLT & NUT - M16, HEX.,GALVANISED (LENGTH TO SUIT POLE)	515466		1	1
59	BRACKET - CABLE STORAGE, ADSS, FIBERLIGN (PLP PART No.: OFSCCM-02-400) (SEE NOTE 6)			1	1
58	SADDLE - CABLE, DOJBLE SIDED, GALVANISED (TO SUIT NOJA CONTROL CABLE)			A/R	A/R
57	SIGN - DANGER HIGH VOLTAGE (SEE NOTE 3)		H47012	2	2
56	SCREW - #12x45mm, SELF DRILLING		175567	A/R	A/R
55	SADDLE - CABLE, 12mm, DOUBLE SIDED, GALVANISED		176494	A/R	A/R
54	LUG - COMPRESSION, COPPER, Ø14mm HOLE (TO SUIT 70mm² CABLE)		74831	11	11
53	CONDUCTOR - 19/2.14(70mm²) COPPER, PVC COVERED, BLACK		60111	A/R	A/R
52	WASHER - SPRING, M16, STAINLESS STEEL	518082	96146	2	2
51	STUBB - EARTH, McKEOWN	520088	H1084/5	2	2
50	NUT - M12, HEX., STAINLESS STEEL	515467	8987	8	8
49	WASHER - SPRING, M12, STAINLESS STEEL	518082	143859	8	8
48	WASHER - FLAT, M12, STAINLESS STEEL	518081	49426	16	16
47	SCREW - SET, M12x30mm, HEX., STAINLESS STEEL	515467	H38529	8	8
46	BAR - EARTH, TOP, FLAT, TINNED COPPER, 50.8x6.3mm (SEE DETAIL 1)	222406	182110	1	1
45	BAR - EARTH, BOTTOM, FLAT, TINNED COPPER, 50.8x6.3mm (SEE DETAIL 1)	222406	182110	1	1
44	CONSTRUCTION - LV, OVERHEAD, ABC, INTERMEDIATE, 1-80 (SEE NOTE 2)	206544		1	1
43	COVER - 11/22kV, ANIMAL PROTECTION (3 PHASE SET) (NKT PART NO.: CE-APC-T1)			2	2
42	BRACKET - CONTROL BOX, OFFSET MOUNTING (AS PER ESSENTIAL ENERGY DRG: CEOM7111.83) (SEE NOTE 17)			1	1
41	LUG - COMPRESSION, BI-METALLIC, M10 HOLE (TO SUIT CONDUCTOR)			12	12
40	RECLOSER - 11kV, NOJA, TYPE OSM15 (COMPLETE WITH CONTROL CUBICLE AND CONTROL CABLING) (SEE NOTES 16 & 17)			1	1
39	CLAMP - LV, SUSPENSION (SEE NOTE 9)		H113472	6	6
38	NUT - M16, NYLOC, HEX., STAINLESS STEEL		177122	6	6
37	WASHER - FLAT, M16, STAINLESS STEEL	518081	H39621	14	14
36	SCREW - SET, M16x40mm, HEX., STAINLESS STEEL	515467	H38413	8	8
35	INSULATOR - 11/22kV, LONGROD, 70kN (CLEVIS/TONGUE)		150375	6	6
34	PLATE - TWISTED, 170x50x6mm, GALVANISED	151086	176901	6	6
33	WASHER - FLAT, M16, GALVANISED	518081	177984	17	17
32	BOLT & NUT - M16x200mm, HEX., GALVANISED	515466	83725	6	6
31	LINK - 12/24kV, 630 AMP, OUTDOOR		58750	6	6
30	WIRE - TIE, PREFORMED, INSULATED, FOR CCT180		176312	3	3
	WIRE - TIE, PREFORMED, INSULATED, FOR CCT120		144600		
29	WASHER - CONICAL, M16, GALVANISED	518082	H39647	7	7
28	WASHER - SQUARE, 50x50x6mm, GALVANISED (Ø18mm HOLE)	518081	H39257	7	7
27	INSULATOR - 11kV, PIN POST, SHORT STUD		144584	3	3
26	BLOCK - GAIN, ALUMINIUM, 150mm		146290	1	1
25	BOLT & NUT - M12x30mm, HEX., GALVANISED	515466	46367	2	2
24	WASHER - SPRING, M16, GALVANISED			3	3
23	BOLT & NUT - M12x130mm, HEX., GALVANISED	515466	46805	2	2
22	SCREW - COACH, M12x100mm GALVANISED		H40484	5	5
21	BRACKET - INSULATOR MOUNTING	256243		3	3
20	BRACE - CROSSARM, ANGLE, TYPE H, 740mm, GALVANISED	46	99116	2	2
19	CROSSARM - 3300x150x100mm, HARDWOOD (SEE DETAIL 4)		H23020	1	1
18	BOLT - EYED LAG, M6x110mm, STAINLESS STEEL (SEE NOTE 11)		182589	1	1
17	WASHER - FLAT, M12, GALVANISED	518081	177982	10	10
16	WASHER - CONICAL, M12, GALVANISED	518082	H39639	4	4
15	BOLT & NUT - M12, HEX., GALVANISED (LENGTH TO SUIT POLE)	515466		2	2
14	LUG - COMPRESSION, BI-METALLIC, 2 x M10 HOLES (TO SUIT CONDUCTOR)	514053		18	18
13	NUT - M10, HEX., STAINLESS STEEL	515467	H39401	36	36
12	WASHER - SPRING, M10, STAINLESS STEEL	518082	50120	36	36
11	WASHER - FLAT, M10, STAINLESS STEEL	518081	49411	72	72
10	BOLT - M10x40mm, HEX., STAINLESS STEEL	515467	45096	36	36
9	WASHER - FLAT, M20, GALVANISED	518081	177986	8	8
8	WASHER - CONICAL, M20, GALVANISED	518082	H39655	8	8
7	WASHER - SQUARE, 75x75x6mm, GALVANISED (Ø22mm HOLE)	518081	H39231	12	12
6	BOLT & NUT - M20, HEX., GALVANISED (LENGTH TO SUIT POLE)	515466		8	8
5	DISCONNECTOR - 12/24kV, LOAD BREAK, MODULAR (SEE NOTE 10)		H95405	1	1
	DISCONNECTOR - 12/24kV, LOAD BREAK, UNITISED (SEE NOTE 10)		66647		
4	CLAMP - PARALLEL GROOVE, 3-BOLT (TO SUIT CONDUCTORS)	514099		6	
3	CONDUCTOR - 11kV CCT (TO SUIT PHASE CONDUCTORS) (MINIMUM CCT 120)			A/R	A/R
2	CONSTRUCTION - 11kV, OVERHEAD, 2-11CCT (EXCLUDING BRIDGES)	174962			1
	CONSTRUCTION - 11kV, OVERHEAD, 2-11 (EXCLUDING BRIDGES)	513915		1	
1	POLE - TIMBER (MINIMUM 12kN) (POLE LENGTH AS REQUIRED)	513988		1	1

CAD DRAWING
DO NOT MANUALLY AMEND
AMENDMENTS

ASSOCIATED DRAWINGS

NETWORK STANDARD
Ausgrid
145 NEWCASTLE RD WALLSEND, NSW 2287

SCALE	AS SHOWN
DESIGNED	C.MABBUTT
DRAWN	P.RIOS
CHECKED	P.JONES
APPROVED	G.FORD
DATE	06/04/2022
PROJECT NUMBER	STD
PROJTRAK NUMBER	-

STANDARD CONSTRUCTION
11kV NOJA TYPE OSM15 RECLOSER
WITH BY-PASS AIR BREAK SWITCH
MOUNTED ON A TIMBER POLE
GENERAL ARRANGEMENT

SIZE	DRAWING No	SHEET	AMD
A1	255677	1	0

20110901