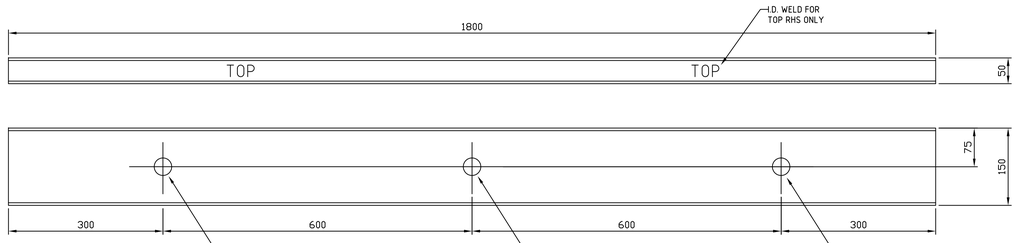

ITEM 1 - TOP/BOTTOM RHS
SCALE 1:5
MATERIAL : 150 x 50 RHS

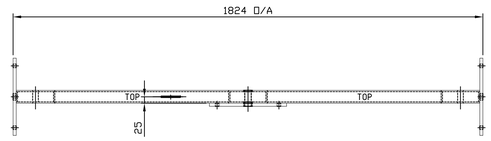

TOP VIEW
SCALE 1:10

DESIGN NOTES:

1. THE FRAME CAN SUPPORT 3 REGULATORS OF MAXIMUM WEIGHT OF 1500kg EACH.
2. THE FRAME HAS BEEN DESIGNED FOR AN ADDITIONAL VERTICAL LOAD OF 200kg (POLE TOP RESCUE).
3. THE FRAME SHALL BE CONNECTED TO A STRONG AND DURABLE TIMBER POLE WITH 5 M24 GALVANISED BOLTS. THE TIMBER POLE SHALL HAVE A JOINT GROUP CLASSIFICATION OF J1 OR J2 OR JD1 OR JD2 IN ACCORDANCE WITH AS 1720.

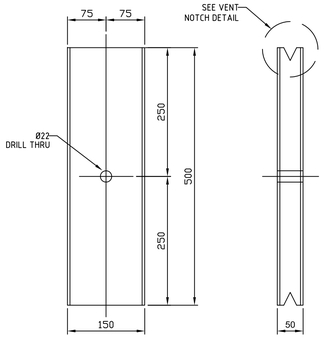

ITEM 2 - END SUPPORT RHS
SCALE 1:5
MATERIAL : 150 x 50 RHS

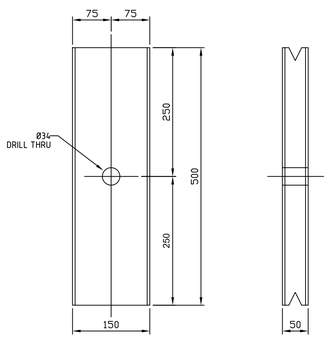

ITEM 2a - CENTRE SUPPORT RHS
SCALE 1:5
MATERIAL : 150 x 50 RHS

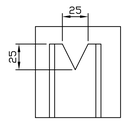

VENT NOTCH DETAIL
SCALE 1:2.5

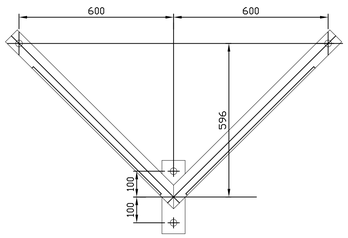

COMPONENT 11
SCALE 1:10

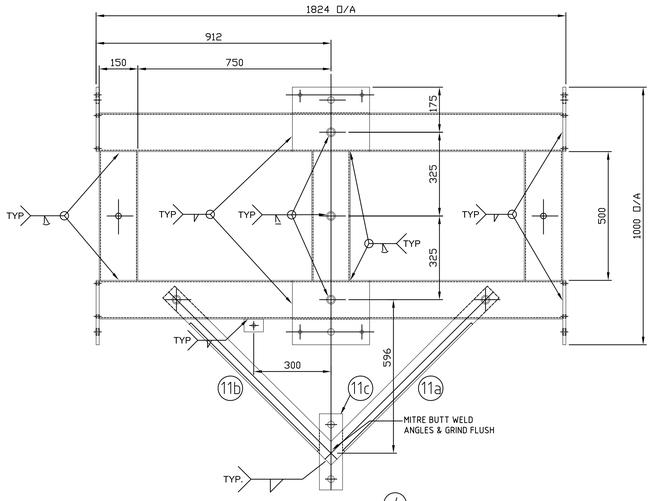

FRONT VIEW
SCALE 1:10

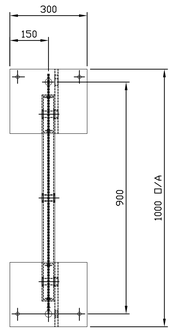

END VIEW
SCALE 1:10

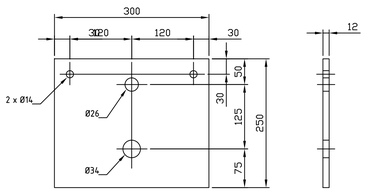

ITEM 3 - TOP CENTRE PLATE
SCALE 1:5
MATERIAL : 250 x 12 FLAT

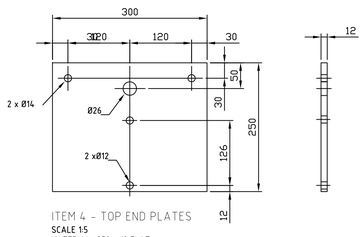

ITEM 4 - TOP END PLATES
SCALE 1:5
MATERIAL : 250 x 12 FLAT

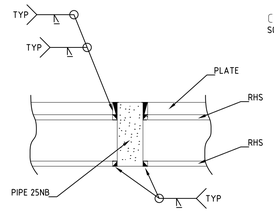

PIPE WELD SECTION
SCALE 1:2.5

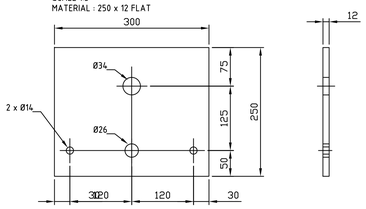

ITEM 5 - BOTTOM CENTRE PLATE
SCALE 1:5
MATERIAL : 250 x 12 FLAT

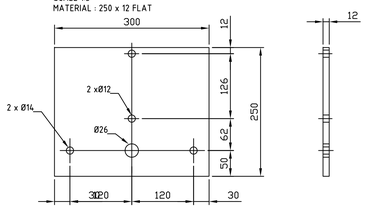

ITEMS 6 - BOTTOM END PLATES
SCALE 1:5
MATERIAL : 250 x 12 FLAT

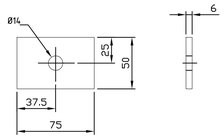

ITEM 12 - EARTH TAG
SCALE 1:2.5

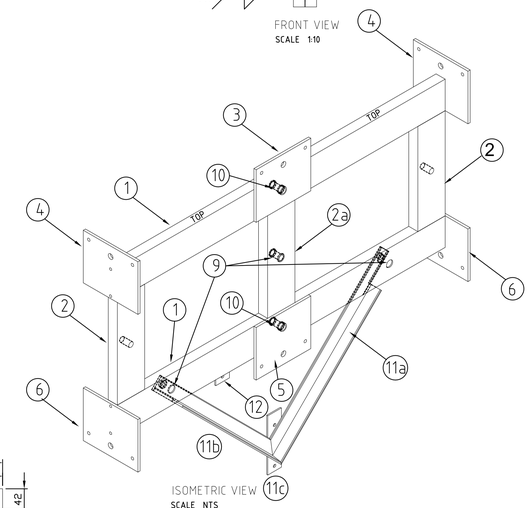

ISOMETRIC VIEW
SCALE NTS

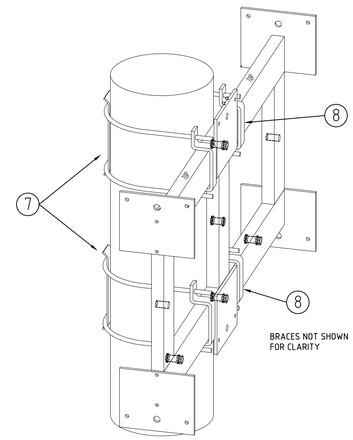

ASSEMBLY VIEW
SCALE NTS

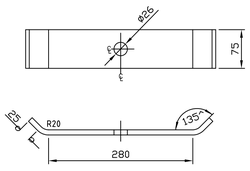

ITEM 7 - BACKING PLATE
SCALE 1:5
MATERIAL : 75 x 6mm FLAT

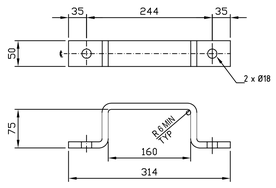

ITEM 8 - CROSSARM BRACKET
SCALE 1:5
MATERIAL : 50 x 12mm FLAT

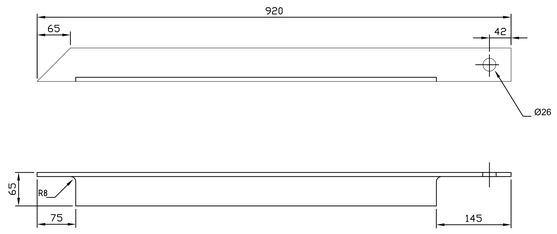

ITEM 11a - ANGLE SUPPORT BRACE
ITEM 11b - OPPOSITE HAND
SCALE 1:5
MATERIAL: 65 x 65 x 8mm STEEL ANGLE

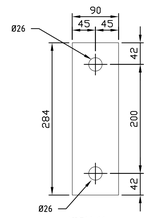

ITEM 11c
SCALE 1:5
MATERIAL: 90 x 8mm FLAT

NOTES

1. ALL WORKMANSHIP SHALL COMPLY WITH AS 4100.
2. ALL WELDING SHALL COMPLY WITH AS 1554 CATEGORY GP.
3. ALL WELDS SHALL BE 6mm CONTINUOUS FILLET UNLESS NOTED OTHERWISE.
4. BUTT WELDS SHALL BE FULL PENETRATION UNLESS NOTED OTHERWISE.
5. ALL DIMENSIONS IN MILLIMETRES.
6. DO NOT SCALE.

SURFACE PREPARATION AND PROTECTION

1. HOT DIPPED GALVANISED COATING TO AS/NZS 4680-1999.
2. DE-BURR AND DRESS BEFORE DELIVERY.

COMPONENT 11 (ITEMS 11a, 11b, 11c)
CAN BE ORDERED AS A STAND ALONE COMPONENT FOR RETROFIT SITUATIONS.

ITEM	DESCRIPTION	QTY
12	FLAT - 75 x 6 x 50 LONG AS3679.1-300	1
11c	FLAT - 90 x 8 x 284 LONG AS3679.1-300	1
11b	EQUAL ANGLE - 65 x 65 x 8 x 920 LONG AS3679.1-300	1
11a	EQUAL ANGLE - 65 x 65 x 8 x 920 LONG AS3679.1-300	1
10	PIPE 25NB MEDIUM WALL x 62 LONG AS1163-350	2
9	PIPE 25NB MEDIUM WALL x 50 LONG AS1163-350	3
8	FLAT - 50 x 12 x 480 LONG AS3679.1-300	4
7	FLAT - 75 x 6 x 330 LONG AS3679.1-300	2
6	FLAT - 250 x 12 x 300 LONG AS3679.1-300	2
5	FLAT - 250 x 12 x 300 LONG AS3679.1-300	1
4	FLAT - 250 x 12 x 300 LONG AS3679.1-300	2
3	FLAT - 250 x 12 x 300 LONG AS3679.1-300	1
2a	RHS - 150 x 50 x 5 x 500 LONG AS1163-350	1
2	RHS - 150 x 50 x 5 x 500 LONG AS1163-350	2
1	RHS - 150 x 50 x 5 x 1800 LONG AS1163-350	2

CAD DRAWING
(DO NOT MANUALLY AMEND)

0	A.W.E.S.O.M. PARTS WALLSEND	
1	DWN: BARBARA BARSKI CHKD: WILLIAM GRAHAM DATE: 5/11/07	Ø22 ADDED TO ITEM 2
2	APP'D by: WILLIAM GRAHAM DWN: NATALIE SINGLETON CHKD: PETER STOREY DATE: 3/7/08	TITLE BLOCK CHANGED
3	APP'D by: PETER STOREY DWN: RAT IDEAL CHKD: DANIEL DAPO DATE: 20/7/10	ANGLE BRACE ITEM 11 UPDATED
4	APP'D by: ROSS HUGHES DWN: ALEX SPITERI CHKD: PAUL LOVARINI DATE: 9/8/11	WEIGHT OF REGULATORS REVISED. No. OF BOLTS INCREASED AND BRACING REVISED (COMPONENT 11)
5	APP'D by: KATINA GALLEN DWN: PETER JARVIS CHKD: C.MABBUTT DATE: 25.7.18	DRAWING TITLE CHANGED TO REFLECT SUPPLY CONTRACT
	APP'D by: DARKO GREEV	

CONSTRUCTION

11kV POLE MOUNTED VOLTAGE REGULATOR WITH CONTROLLING INTELLIRUPTER GENERAL ARRANGEMENT	224227
11kV POLE MOUNTED VOLTAGE REGULATOR & NU-LEC RECLOSER GENERAL ARRANGEMENT	182685

ASSOCIATED DRAWINGS

Ausgrid
570 GEORGE ST
SYDNEY NSW 2000

SCALE	AS SHOWN
DESIGNED	WILLIAM GRAHAM
DRAWN	BARBARA BARSKI
CHECKED	PAUL LOVARINI
APPROVED	TASS VELONAS
DATE	09-08-11
PROJECT NUMBER	-
PROJTRAK NUMBER	STD

EATON COOPER POWER SYSTEMS 100A & 200A POLE MOUNTED VOLTAGE REGULATOR MOUNTING FRAME CONSTRUCTION DETAIL

SIZE	DRAWING No	SHEET	AMD
B1	181618	1	5

©