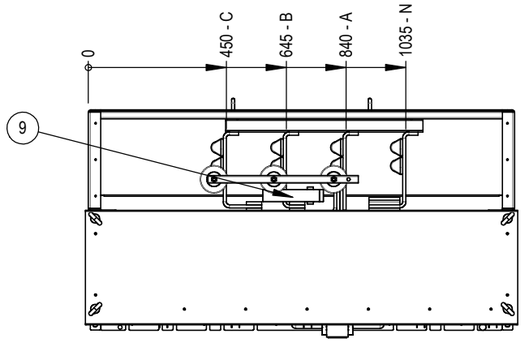

REAR TOP PANEL REMOVED

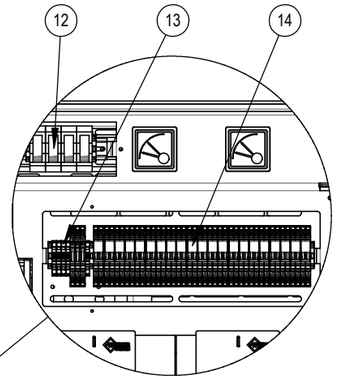

COVERS REMOVED
SCALE 1 : 10

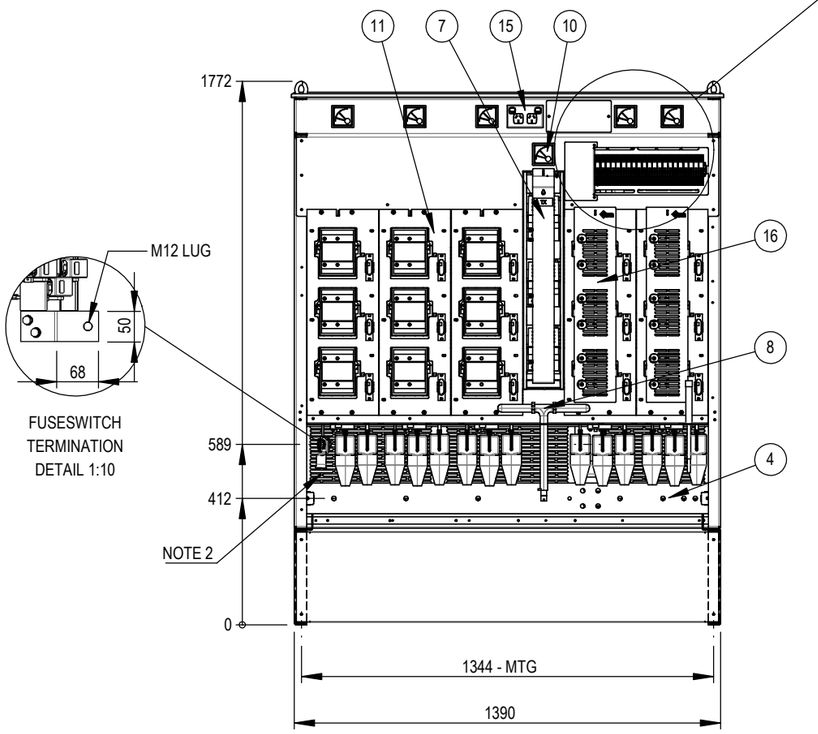

FUSESWITCH
TERMINATION
DETAIL 1:10

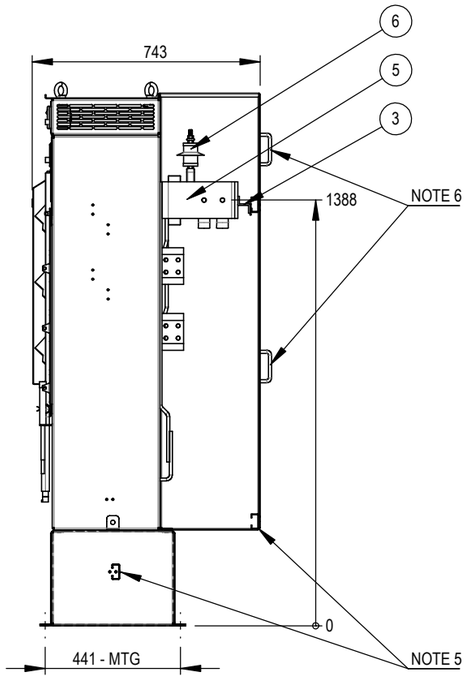

REAR SIDE PANEL REMOVED

NO.	QTY.	PART NO.	DESCRIPTION
1	1	00015-SA10	POWDERCOATED SHEETMETAL
2	1	00015-SA16	POWDERCOATED SHEETMETAL
3	3	LVZIT	BUSBAR, TXF CONNECTION SUPPORT
4	1	00015-C013	NEUTRAL BAR 100x10mm Ag Cu (ON INSULATORS)
5	1	00015-CA19	120x10 CU - TXF CONNECTION TAGS
6	3	ACC-LVSD415V	SURGE ARRESTER - 415V 5kA
7	1	25003P	2500A TXF DISCONNECTOR + LOCKING COVER
8	1	25003_001	TXF DISCONNECTOR OPERATING HANDLE
9	1	EFE-77127.2973	CT, 2000/5, PSA1254, CL1, 10VA, MID PHASE
10	6	MA-5	MAXIMUM DEMAND INDICATOR, MID PHASE
11	5	VSJ0630BE-001	400A F/S BOTTOM CONNECT, CT FITTED, HANDLE INCLUDED
12	3	FH-32	VOLTAGE TEST POINT FUSES 6A
13	5	WAG-2006-1201	VOLTAGE TEST POINT TERMINALS (INCLUDES N)
14	21	WAG-2007-8821	CT TEST/SHORTING TERMINALS (SET OF 2)
15	1	2P-GPO-KIT	10A FUSE + DOUBLE GPO
16	2	P01806300201	FUSE SWITCH TOUCH COVER

NOTES:

1. THE LV ASSEMBLY IS DEAD FRONT WITH FLEXIBLE INSULATING BOOTS FITTED TO DISTRIBUTOR TERMINALS. ASSEMBLY IS IP21 FROM THE TOP ONLY. THE COVERS DO NOT PROTECT PURPOSEFUL TOUCH FROM UNDERNEATH.
2. TERMINAL COVER REMOVED TO SHOW CUSTOMER CONNECTION HEIGHT.
3. INCOMING CONNECTION SUITABLE FOR MAXIMUM 4x 500mm² M12 LUGS PER PHASE + N.
4. FUSE SWITCH SUITABLE FOR MAXIMUM 1x 300mm2 M12 LUGS PER PHASE
5. REMOVABLE CABLE CLAMP RAILS, OPEN BOTTOM CABLE ENTRY
6. REMOVEABLE PANELS FOR TXF CONNECTION ACCESS
7. EARTHING TERMINAL STUDS PROVIDED ON BOTH LHS AND RHS OF ENCLOSURE

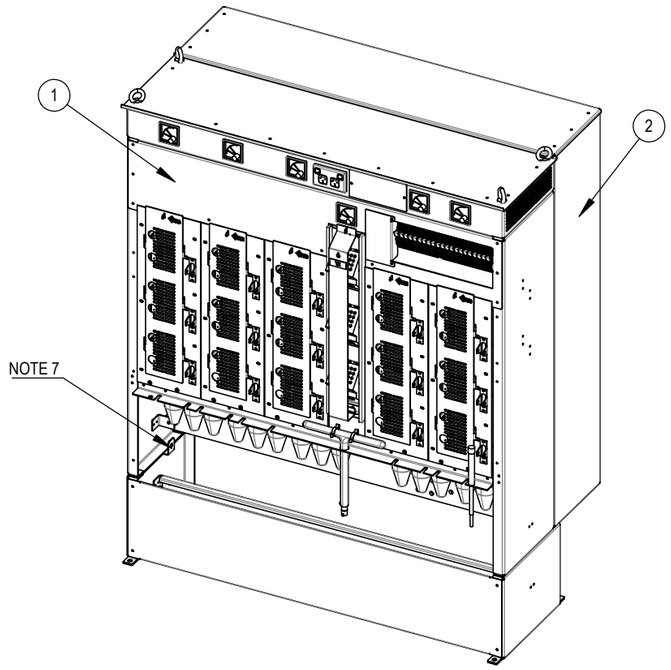

AUSGRID : 265243-1

NOT FOR CONSTRUCTION

REV	DATE	DESCRIPTION	DWN	APP
B	4/07/2023	ADDED GPO, SURGE ARRESTER DETAIL	P.W	J.J
A	9/03/2023	INITIAL DRAWING	P.W	J.J

PROJECT: AUSGRID CHAMBER - STOCKCODE: 181792
ASSEMBLY ID: VF225209-AUS02
DESCRIPTION: 2500A TXF DISCONNECTOR + 5X400A F/S
RATINGS: 2000A, 415 V, 30kA 3s, FORM 1, IP (NOTE 1)
INSTALLATION TYPE: LV KIOSK SUBSTATION
WEIGHT: 480 kg

WEBER SOUTH PACIFIC PTY LTD
PO BOX 4264 Eight Mile Plains
Queensland Australia
TEL. (07) 3841 6899
FAX. (07) 3841 6877
EMAIL:- sales@websouthpacific.com.au

THIS DRAWING AND SPECIFICATIONS HEREIN MUST NOT BE REPRODUCED OR COPIED IN PART OF WHOLE WITHOUT THE PRIOR PERMISSION OF WEBER SOUTH PACIFIC.

Scale: 1:20	Standard: AS/NZS 61439.2	Client: AUSGRID	Size: A3
DO NOT SCALE	Drawing: GENERAL ARRANGEMENT	Part Number: VF225209-AUS02	Type: 3D
Tolerance: ± 5 UNO	SHEET 1 OF 1	Drawing Number: 00015-GA21	Revision: B
ALL DIMENSIONS IN MM UNLESS NOTED OTHERWISE			