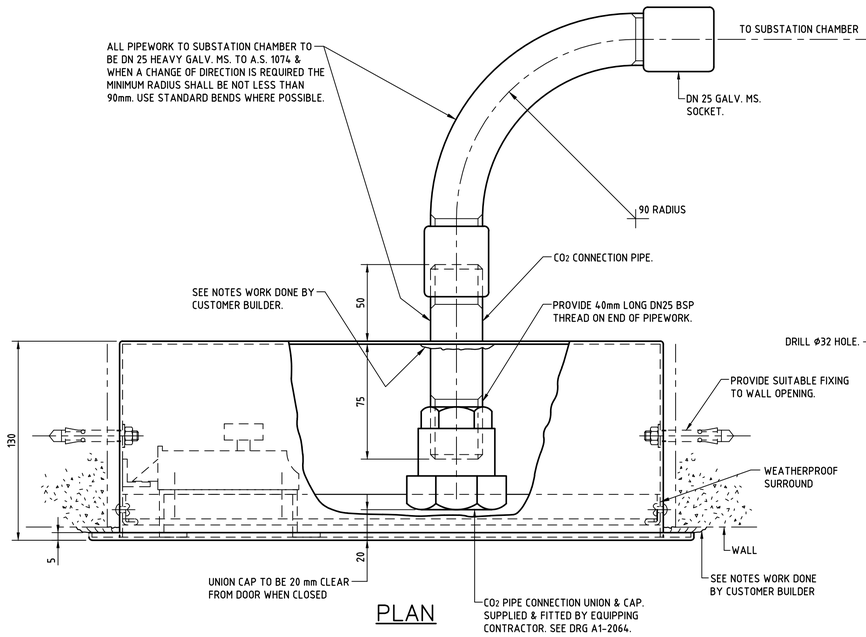

PLAN

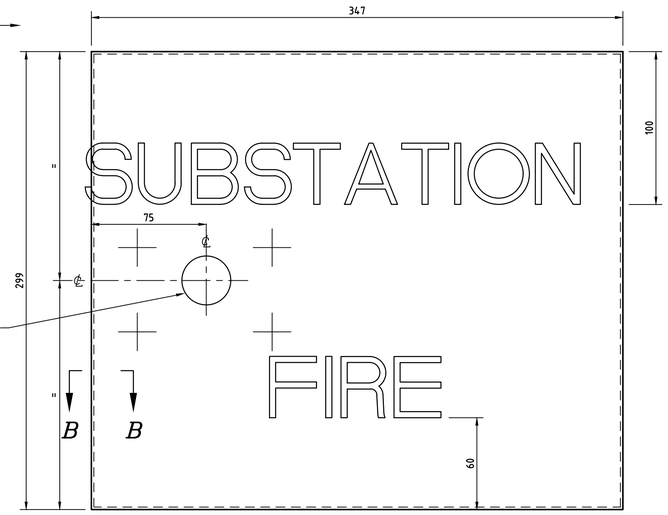

FRONT DOOR DETAIL

SEE NOTES FOR DOOR SIGNAGE DETAILS

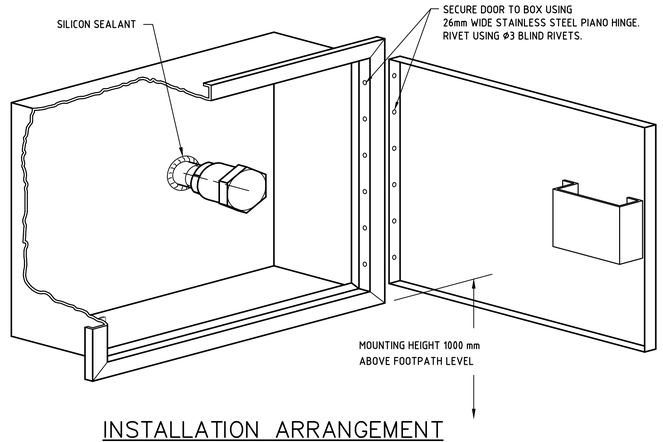

INSTALLATION ARRANGEMENT

DOOR TO BE HINGED FROM RIGHT HAND SIDE

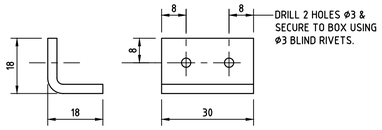

LATCH BOLT STRIKER PLATE

SCALE 1:1

MATERIAL : 3mm THK M.S.

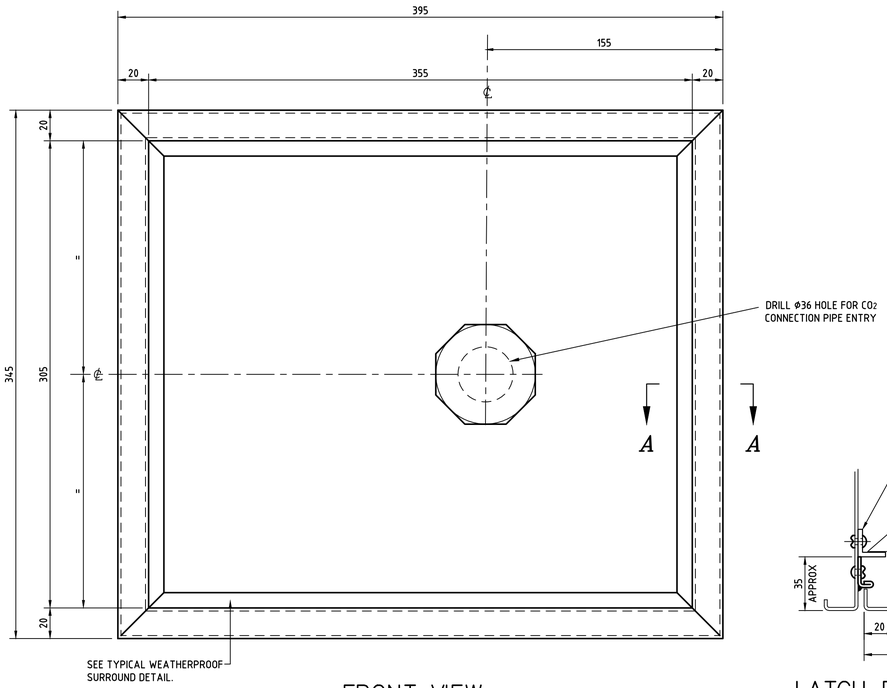

FRONT VIEW

HINGED DOOR NOT SHOWN

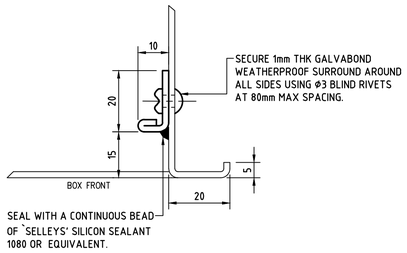

SECTION A – A

SCALE 1:1

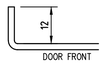

SECTION B – B

SCALE 1:1

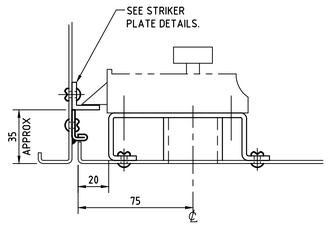

LATCH BOLT ARRANGEMENT

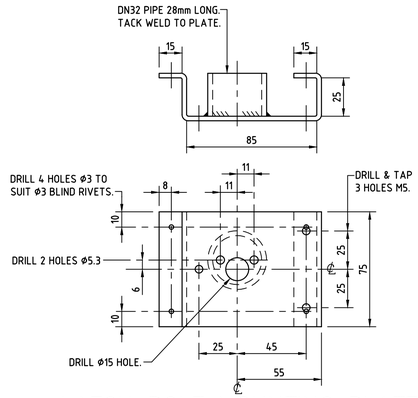

LATCH BOLT MOUNTING PLATE

MATERIAL : 3mm THK M.S.

REFERENCE DRAWINGS

CO2 CONNECTION UNION, UNION CAP & NOZZLE DETAILS — A1-2064

WORK DONE BY CUSTOMER BUILDER

* PROVIDE A 320 mm. HIGH x 370 mm. WIDE x 140 mm. DEEP OPENING IN WALL TO HOUSE CO2 CONNECTION BOX.
* BOX TO BE PROTECTED AGAINST CORROSION BY TREATING ALL EXTERIOR SURFACES ENCASED IN WALL OPENING USING `ORMONOID DUROSEAL' OR EQUIVALENT PRIOR TO SECURING IN POSITION BY GROUT OR OTHER SUITABLE WALL FIXING METHODS. AT INSTALLATION WEATHERPROOF BOX BY USING `DOW CORNING' SILICON SEALANT 1080 OR EQUIVALENT BETWEEN BOX FLANGE SURROUND & BUILDING. ALSO SEAL AROUND GALVANISED PIPE ENTRY INTO BOX.
* A DN 25 HEAVY GALVANISED MS. PIPE TO A.S. 1074 IS TO PROJECT 75 mm AS SHOWN INTO THE WALL MOUNTED CO2 CONNECTION BOX AND IS TO BE RUN FROM THE BOX TO THE SUBSTATION CHAMBER & IS TO PROJECT 300mm INTO THE CHAMBER. THE PIPE IS TO BE EXPOSED FOR THE FULL LENGTH OF ITS RUN AND IS TO BE SCREWED AND CAPPED BOTH ENDS.
* BOX IS NOT TO BE COVERED OR PAINTED OVER BY THE BUILDER.

NOTES FOR BOX MANUFACTURER

1. BOX & LID TO BE WELDED CONSTRUCTION FABRICATED FROM 1.6 mm. THK. M.S. SHEET.
2. REMOVE ALL BURRS & SHARP EDGES.
3. COMPLETED BOX TO BE THOROUGHLY CLEANED THEN GIVEN ONE COAT OF ZINC CHROMATE PRIMER THEN FINISHED INSIDE AND OUTSIDE WITH TWO COATS OF ENAMEL TO COLOUR `WARATAH' No. R14 TO A.S. 2700 1985.
4. DOOR SIGNAGE TO BE 40mm HIGH WHITE PAINTED LETTERS STATING `SUBSTATION FIRE' OTHER FORMS OF DOOR SIGNAGE MAY BE CONSIDERED BUT SHALL BE SUBMITTED TO AUSGRID FOR APPROVAL PRIOR TO USE.
5. THE BOX IS TO BE FITTED WITH A `LOCKWOOD 3572' SERIES LATCH BOLT & AN OVAL CYLINDER. AUSGRID KEYED ABLOY CYLINDERTO BE INSTALLED PRIOR TO COMMISSIONING THE SUBSTATION.

GENERAL NOTE

1. WALL MOUNTED CO2 CONNECTION BOX AUSGRID STOCK COMPUTER No 123729.
2. ALL WORK TO BE UNDERTAKEN IN CONJUNCTION WITH AUSGRID'S NETWORK STANDARDS.

CAD DRAWING
DO NOT MANUALLY AMEND

AMENDMENTS

7. REDRAWN ON ACAD. DRG CLARIFIED TO INCLUDE INSTALLATION DETAILS NOTES. — RG 07/1991 — CHECKED: KEM — PN: 25082
8. PIPE PROJECTION DIM. 75 & NOTE ADDED TO PLAN CUSTOMER BUILDER NOTES ALTERED TO NEW STANDARD. REF DRG ALTERED. — RG 07/1993 — CHECKED: KEM — PN: 83136
9. INDICATOR PANEL & PRESS BUTTON DETAILS REMOVED FROM BOX. DOOR & HINGING DETAILS ADDED. NIGHTLATCH ARRANGEMENT & SIGNAGE DETAILS ADDED. CONDUIT REMOVED FROM BOX. — CS 29/11/2001 — CHECKED: PH
10. MOUNTING HEIGHT UPDATED TO AUSGRID NETWORK STANDARD. STOCK CODE UPDATED. GENERAL NOTE 2 ADDED. — PJ 24/01/2008 — CHECKED: IR — APPROVED: MT
11. NEW AUSGRID BORDER & LOGO ADDED. — R.LAALAA 13/09/2013 — APPROVED T.LAMPARD
12. NOTES FOR BOX MANUFACTURER AMENDED. INSTALLATION ARRANGEMENT - PIANO HINGE CHANGED TO STAINLESS STEEL. — P.RIOS 07/04/2022 — CHECKED: P.TURRIN — APPROVED G.FORD
13. BORDER & TITLE BLOCK UPDATED. — M.BENNETT 09/09/2024 — CHECKED: L.MARTINUZZI — APPROVED: M.BENNETT

Ausgrid
24-28 Campbell Street
SYDNEY NSW 2000

ISSUED FOR CONSTRUCTION

SCALE	1:1,2
DESIGNED	-
DRAWN	RVG
CHECKED	KEM
APPROVED	PH
DATE	07/1991
TRIM REF	-
PROJECT NUMBER	25082

STANDARD CONSTRUCTION
WALL MOUNTED CO2 CONNECTION BOX
GENERAL ARRANGEMENT &
INSTALLATION DETAILS

DRAWING No 56197 — SHEET 1 — AMD 13 — SIZE A1

©